FACULTY OF ELECTRONICS AND COMPUTER TECHNOLOGY AND ENGINEERING

SEM II - 2025/26

BERR 2243

DATABASE AND CLOUD SYSTEM

EXERCISE 2 REPORT

LECTURER NAME:

PROFESOR MADYA DR SOO YEW GUAN

No.	Student Name	Matrix No.
1	IKMAL IMAN BIN MOHD YUSOF	B122410306
2	MUHAMMAD ARIF SYAFIE BIN AGUS SALEH	B022210116
3	MUHAMMAD HAIKAL BIN ZULKIFLI	B122410348

Discussion 1

All node that been placed in Node-RED:

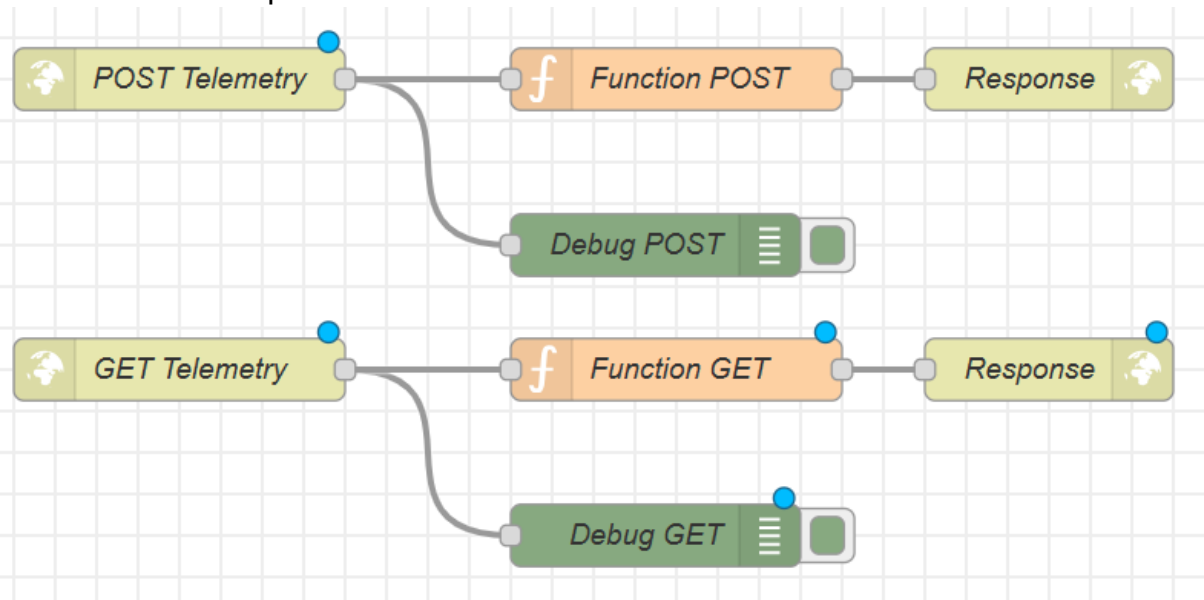

Code in function node for POST Method:

Name: Function POST

Setup | On Start | **On Message** | On Stop

```
let data = msg.payload;

msg.payload = {
    method: "POST",
    status: "success",
    message: "Data received!",
    receivedData: data
};

return msg;
```

Code in function node for GET Method:

Name: Function GET

Setup | On Start | **On Message** | On Stop

```
msg.payload = {
    method: "GET",
    message: "Hai Client from NodeRED 👋"
};

return msg;
```

POST Method

The raw data from Postman:

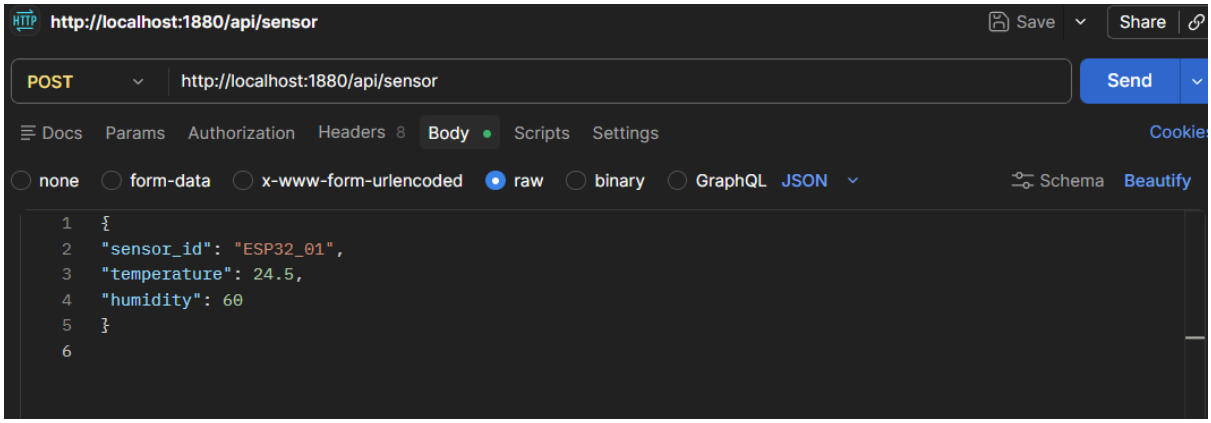

Data log from Node-RED Debug Window:

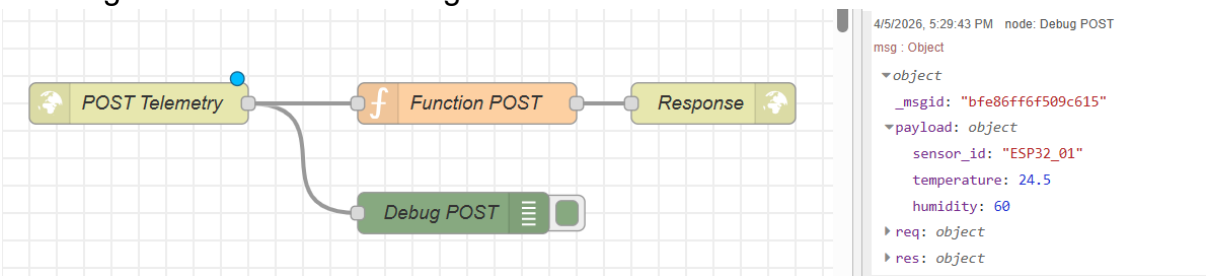

Response from NodeRED on Postman:

GET Method

Data log from Node-RED Debug Window:

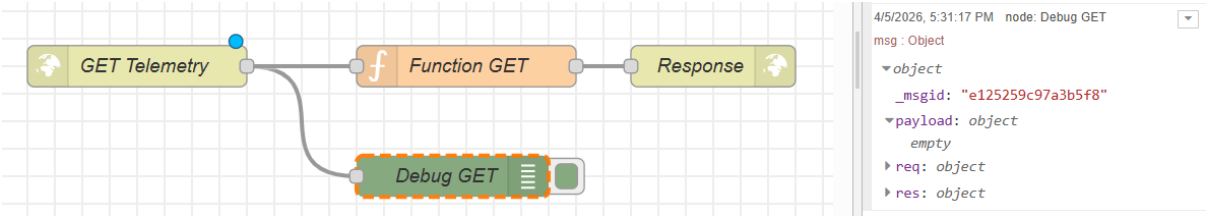

Response from NodeRED on Postman:

Body Cookies Headers 8 Test Results 200 OK 13 ms 334 B

JSON Preview Visualize

```
{
    "method": "GET",
    "message": "Hai Client from NodeRED 👋"
}
```

What happened to your JSON payload when you switched to a GET request? Did Node-RED successfully log the temperature data in the debug window? Explain the fundamental architectural difference between how a POST request and a GET request handle data payloads.

During the GET request session, Node-RED was not able to log the temperature data in the debug window because no data was sent from Postman in the request body. GET request is mainly used to request data, not to send data, so Node-RED did not receive any temperature value to display.

During the POST request session, the temperature data was successfully logged because Postman sent the data to Node-RED. The data was received in msg.payload, so Node-RED could process and show it in the debug window.

The main difference between POST and GET is how they handle data. POST is used to send data from the client to the server, while GET is used to request data from the server. In POST, data is sent in the request body, but in GET, data is usually passed through the URL and not in the body.

Discussion 2

Ipconfig from Windows Command Prompt:

```
Wireless LAN adapter Wi-Fi:

   Connection-specific DNS Suffix  . :
   IPv6 Address. . . . . . . . . . . : 2001:e68:544f:4cf5:2967:b91f:6e8e:e0b
   Temporary IPv6 Address. . . . . . : 2001:e68:544f:4cf5:40ea:d77c:afb5:a0b0
   Temporary IPv6 Address. . . . . . : 2001:e68:544f:4cf5:5878:6bdb:7dac:b2d1
   Link-local IPv6 Address . . . . . : fe80::7465:bb53:c39d:bb15%18
   IPv4 Address. . . . . . . . . . . : 192.168.0.210
   Subnet Mask . . . . . . . . . . . : 255.255.255.0
   Default Gateway . . . . . . . . . : fe80::1%18
                                       192.168.0.1
```

IP Setting from Android Phone (Same Network with Windows Device):

IP address

192.168.0.163
2001:e68:544f:4cf5:6464:5ff:fef7:3a66
2001:e68:544f:4cf5:a4b3:a6fb:bf97:7ee7
fe80::6464:5ff:fef7:3a66

http://192.168.0.210:1880/api/sensor on Phone's Broswer:

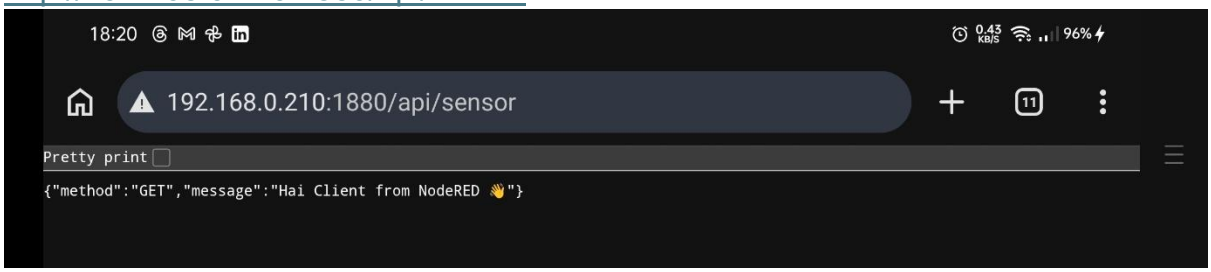

Data log from Node-RED Debug Window:

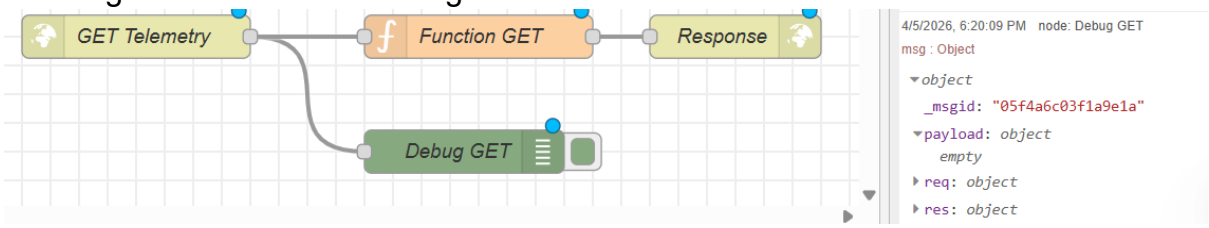

Did your phone successfully trigger the Node-RED flow? Explain why you are not able to send a request to the POST method from your phone?

My phone was able to trigger the Node-RED flow only during the GET request, where it successfully displayed the response from Node-RED. However, it was not able to trigger the flow during the POST request.

This is because when I access the URL using my phone browser, it automatically sends a GET request to the server. This matches the GET method configured in Node-RED, so the response is returned correctly.

For the POST request, the phone browser is still sending a GET request instead of POST. To send a POST request, tools like Postman or a form submission are required.

Disscussion 3

Header Log during GET Request (**A.Postman -> Node-RED**)


```
headers: object
    content-type: "application/json"
    user-agent: "PostmanRuntime/7.53.0"
    accept: "*/*"
    postman-token: "8d6855dd-22cd-42d5-a1fe-
    03974c6fd171"
    host: "localhost:1880"
    accept-encoding: "gzip, deflate, br"
    connection: "keep-alive"
    content-length: "75"
```

Header Log during POST Request (**A.Postman -> Node-RED**)

```
headers: object
    content-type: "application/json"
    user-agent: "PostmanRuntime/7.53.0"
    accept: "*/*"
    postman-token: "73540c03-ed39-4d16-8a8d-
    11db6db46d6d"
    host: "localhost:1880"
    accept-encoding: "gzip, deflate, br"
    connection: "keep-alive"
    content-length: "75"
```

Header Log during POST Method (**B.Phone Broswer -> Node-RED**)

```
headers: object
    host: "192.168.0.210:1880"
    connection: "keep-alive"
    cache-control: "max-age=0"
    upgrade-insecure-requests: "1"
    user-agent: string
        Mozilla/5.0 (Linux; Android 10; K) Apple
        WebKit/537.36 (KHTML, like Gecko) Chrom
        e/146.0.0.0 Mobile Safari/537.36
    accept: string
        text/html,application/xhtml+xml,applicat
        ion/xml;q=0.9,image/avif,image/webp,imag
        e/apng,*/*;q=0.8,application/signed-exch
        ange;v=b3;q=0.7
    accept-encoding: "gzip, deflate"
    accept-language: "en-GB,en-
    US;q=0.9,en;q=0.8,ms;q=0.7"
```

What is the content-type listed under the headers? What is the IP address of the client that sent the request (look for remoteAddress)? Compared the differences between A and B

The remoteAddress field was not shown in the expanded msg.req object for either activity, even after expanding all available tabs. Therefore, the exact client IP address could not be identified from the Node-RED debug output. However, the headers still show clear differences between both requests. In Activity A, the request came from Postman with content-type: application/json, which indicates an API-style request carrying JSON data. In Activity B, the request came from a mobile browser, as shown by the Android Chrome user-agent, which indicates a normal browser request rather than a JSON API request.